PF3400 INDUSTRIAL COLLABORATIVE SCARA ROBOT

The World's Safest/Fastest Robot

The growth of collaborative robots that can safely work side-by-side with people makes automation accessible to a new generation of applications. However, this accessibility has come at the cost of reduced cycle time, higher prices and the loss of features.

Meets ISO Force Standards for Collaborative Robots

The PF3400 is the world's first collaborative four-axis SCARA robot. Its inherently safe design allows the PF3400 to achieve speeds and accelerations much faster than any other collaborative robot while still limiting forces to ISO collaborative robot standards, making the PF3400 the world's fastest/safest robot. This distinctive SCARA design can perform the industry standard pick-and-place cycle time test in 1.4 sec, only slightly slower than many non-collaborative industrial robots and comparable to human operators. Even at the fastest speeds, the PF3400 limits free space collision forces to under 100N and rigid collisions to under 150N.

Collaborative robots potentially allow for the creation of a mixed manufacturing environment where people can enter and efficiently work around robots without the loss of throughput. However, most "collaborative" robots must move slowly or use a reduced speed collaborative mode, losing productivity whenever users are near. The PF3400's unique combination of speed/safety allows it to operate at full speed and deliver industrial throughput in applications where operators can move freely around the robot without concerns for their safety or impacting production.

In addition to offering a competitive price comparable to non-collaborative robots, the PF3400's unique mechanical design is optimized for collaborative table top applications. This lightweight robot can be carried by one person, mounted on a table and, by plugging in just an AC power cord and an Ethernet cable, is ready to operate. The controller, power supplies and harnessing are embedded within the robot's structure, eliminating external controller cabinets and simplifying installations. Due to its novel configuration, the PF3400 can work in cells with very compact foot prints while providing the extraordinary vertical reach of up to 1.2M.

To simplify setup for new users, many collaborative robots use a programming environment with limited features. Precise Automation's collaborative robots offer the flexibility of both an easy to use web based interface as well as an optional advanced programming environment as capable as any industrial robot. The easy to use Guidance Motion interface is accessible from any web enabled device and allows technicians or operators to quickly and easily setup and teach the PF3400 to perform real work.

PRECISE AUTOMATION

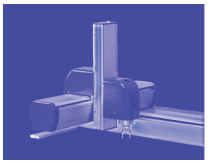

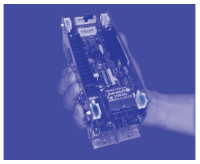

General Specifications	Range & Features
Range of Motion & Resolution	
J1 (Z) Axis	400 mm standard, 750 mm or 1160 mm options available
J2 Axis	+/- 90 degrees
J3 Axis	+/- 167 degrees
J4/Theta Axis	+/- 970 degrees with servo gripper, +110/-470 with mounting flange
Gripper	Robots purchased without a gripper include a standard ISO mounting flange. Pneumatic facilities for single or dual valve grippers are optionally available. In addition, an optional integrated servo gripper is available. The servo gripper has 40 mm of travel and can be outfitted with user developed fingers for holding a variety of different size parts. Software can control squeeze force (between approximately 0-60N for close force, 0-30N for open force) and open/close speed. Safety features include: (1) protection against dropping parts when robot is powered down or e-stop pressed (gripper provides 7-10N of close force when motor power is off) and (2) detection of when a part is being held by the gripper.
Maximum reach	No gripper version: 584 mm to center of ISO mounting flange Servo gripper version: 662 mm end of finger mounts
Repeatability	+/- 90 µm overall in x, y & z directions at 18-22 degrees C
Performance and Payload	
Maximum Acceleration	0.2G with 1 kg payload
Maximum Speed	500mm/sec in Z, 1,500mm/sec in horizontal plane with 1kg payload
Maximum Payload	3kg including gripper, 2.5kg with typical 0.5kg gripper
Motors	Brushless DC servo motors with absolute encoders on axes J1-J4, no motion during homing.
Collaborative Forces	All Precise collaborative robots exert forces that fall within the force guidelines for collaborative robots as defined by the recent ISO/TS 15066 Standard on Collaborative Robots. Even maximum speed collisions in free space are well under the ISO force limits for operator safety. However, in order to use a robot in an application without safety shields, the application as a whole (including end effectors, operation methods, objects being handled and obstacles in the workcell) must be evaluated for safety. For more information on the evaluation of applications and workcells without safety shields, please contact Precise Automation.
General Safety	Robot has designed in Category 3 safety features including dual independent E-stop channels as a standard feature
Cycle Time	25 x 300 x 25 mm pick and place cycle with 1 kg payload: 1.4 sec
Interfaces	
General Communications	RS-232 channel, 10/100 Mbps Ethernet port, dual E-stop input, all available on Facilities Panel at the robot base
Digital I/O Channels	Eight optically isolated inputs and eight optically isolated outputs available on Facilities Panel. Additional remote I/O available via Precise RIO modules or 3rd party MODBUS/TCP devices
Air Lines	Air lines are provided when optional pneumatic facilities for single or dual valve grippers are ordered
Operator Interface	Web based operator interface supports local or remote control via browser connected to embedded web server
Programming Interface	Three methods available: Guidance Motion (simple GUI for non-programmers using teach and repeat methods), embedded Guidance Programming Language (standalone, modeled after Visual Basic.Net), PC control using open source TCP/IP Command Server operated via Ethernet connection (TCP).
Required Power	Input range: 90 to 264 VAC, single phase, 50-60 Hz, 365 watts maximum
Weight	20 kg for 400 mm travel version
Linear Rail Option	
Configurations	Any model of the PF3400 can be mounted on the Linear Rail with all of the robot's interfacing cables routed internally in the Rail.
Repeatability	+/- 50 µm
Maximum Speed	700 mm/sec
Dimensions	1 M travel version – 1.37 m long x 0.23 m deep x 0.12 m high 1.5 M travel version – 1.87 m long x 0.23 m deep x 0.12 m high 2 M travel version – 2.37 m long x 0.23 m deep x 0.12 m high

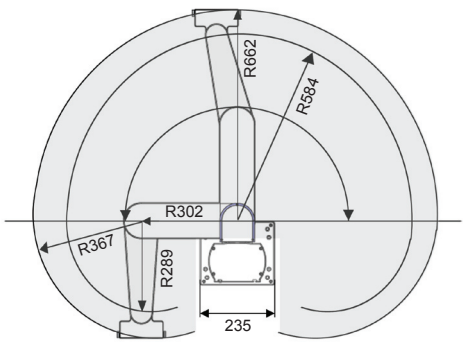

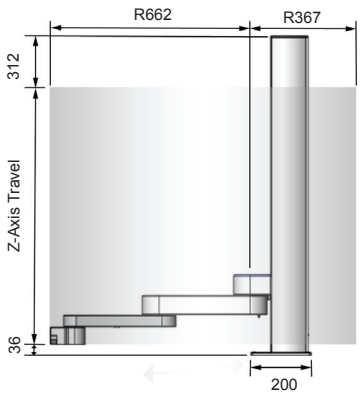

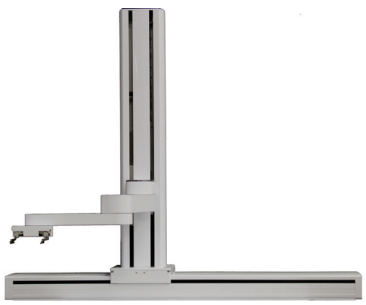

PF3400 Robot on Linear Rail

PRECISE AUTOMATION

MONARCH AUTOMATION
Intelligent Automation Solutions

automate with ease